ISO9001: 2015

ISO14001: 2015

APPROVAL SPECIFICATIONS

Title. LOCKLESS SWITCH

Product Model. PB21E08431-0506

Customer's Part NO.

Customer's Model:

Customer's Approval Requested.

Please return this copy as a certification of your approval.

Checked by: Date:

Approved by: Date:

温州港源电子有限公司

Wenzhou Gangyuan Electronics Co.,Ltd

Address:No.2 Yonghe Yi Road,Chengdong Street,Yueqing City,Zhejiang Province,China.

Tel:0577-06571538

Fax:0577-62573066

Website:http://www.gangyuan.com

APPROVE	REVIEW	PREPARE
林云龙	郑志成	杨 敏

变更履历表：

版本	变更记录	变更人	变 更 日 期

1、 概述 GENERAL

1.1 适用范围 APPLICATION

此规格书适用于机械式无锁类开关的相关要求

This specification is applied to the requirements for Lockless switch (mechanical contact)

1.2 工作温度范围 Operating Temperature Range

-30℃～80℃(在标准大气压、标准湿度条件下)

-30℃～80℃(Normal humidity, normal air pressure)

1.3 贮藏温度范围 Storage Temperature Range

-30℃～85℃(在标准大气压、标准湿度条件下)

-30℃～85℃(Normal humidity, normal air pressure)

1.4 测试条件 Test Conditions

在没有其它特定的条件下，应该在以下的条件下进行测试和测量：

Unless otherwise specified, tests and measurement shall be made in the following standard conditions:

常温……5℃～35℃

Normal temperature……5℃～35℃

标准湿度……相对湿度 25%～85%

Normal humidity……relative humidity 25%～85%

标准大气压……86Kpa～106Kpa

Normal air pressure……86Kpa～106Kpa

在制造过程中，测试和测量应该在以下的条件下进行：

If any doubt arise from the judgment, tests shall be conducted at the following conditions:

温度……20℃±2℃

Temperature……20℃±2℃

相对湿度……65%±5%

Relative humidity…….....…65%±5%

环境气压……86Kpa～106Kpa

Air pressure……86Kpa～106Kpa

1.5 存储方法 Storage method

1. 使用前确保包装完整无破损，无浸湿.

Ensure that the product without package breaking or wetting before use.

2. 存储条件 Storage conditions:

储存温度 Storage temperature：-5 ~ 35 ℃;

储存湿度 Storage humidity：25% ~80%;

未开封状态：6 个月内使用完毕（从发货日开始计算）； 超过 6 个月后再使用的，使用前请先验证：端脚无氧化、无发黑、塑料件无吸湿起泡，确保焊接的适宜性；

Unopened status: Use up the product as soon as possible before 6 months. (calculated from shipment date). Over 6 months, please make sure below ;

before use it: terminal without oxidation or blackening, plastic parts without moisture absorption or bubble, ensure solderability.

已开封状态：1 个月内使用完毕；

Opened status: use up within 1 month;

储存注意事项：避开高湿高温和有腐蚀性气体的环境及阳光直射；

Storage precautions: Please avoid the following environment: with high humidity, high temperature , corrosive gases and direct sunlight.

3. 请勿超重叠放.

Do not stack too many switches.

2、 详细说明

Detailed specification

2.1 外观：应无影响、降低产品性能的缺陷；

Appearance: There should be no defects that affect the serviceability of product.

2.2 结构尺寸和安装尺寸：应符合装配图要求；

Style and dimension: shall conform to the assemble drawings.

2.3 操作形式：有触觉反应的操作

Type of actuating: Tactile feedback.

2.4 开关结构：单回路单输出(具体的触点结构在装配图中已绘出)；

Contact arrangement: 2 pole, 2 throw

(Details of contact arrangement are given in the assembly drawings.)

2.5 额定值：DC 30V 0.1A

Ratings: DC 30V 0.1A

3．电气性能：

ELECTRICAL SPECIFICATION

项 目 ITEM		试 验 条 件 TEST CONDITIONS	要求 REQUIREMENTS
3.1	接触电阻 Contact Resistance	在以 5V 10mA 的直流电源或不低于 1KHz 的交流电源的电路中，以一个等于 1.5 倍按力的静负荷施加于手柄中心 Applying a static load of 1.5 times operating force to the center of the stem, measurements shall be made by 5V DC 10mA or more than 1KHz AC small-current contact resistance meter.	≤100mΩ
3.2	绝缘电阻 Insulation Resistance	输入 100V DC 电压 1 分钟，按以下接触方法测试： Apply a voltage of 100V DC shall be applied for 1 min. After which measurement be made: （1） 不接触的端子脚之间 Between conductors not to be contact （2）端子脚与盖板之间 Between individual terminals and frame	≥100MΩ
3.3	耐 压 Dielectric voltage proof	输入 AC 250V (50-60HZ)电压，1 分钟，感应电流为 0.5mA，按以下接触方法测试： AC 250V rms（50-60Hz）For 1 MIN，trip current:0.5mA （1）不接触的端子脚之间 Between conductors not to be contact （2）端子脚与盖板之间 Between individual terminals and frame	无击穿、无飞弧 There should be no breakdown and flashover

4．机械性能：

MECHANICAL SPECIFICATION

项目 ITEM		试 验 条 件 TEST CONDITIONS	要求 REQUIREMENTS
4.1	按力 Operating Force	开关垂直于操作方向放置，在开关驱动件顶端中心逐渐施力，测量开关导通所需的最大力度。 Placing the switch such that the direction of switch operation is vertical and then gradually increasing the load applied to the center of the stem, the maximum load required for the switch to come to a stop shall be measured.	180±70 gf
4.2	总行程 Full Travel	开关垂直于操作方向放置，以一个等于 2 倍按力的静负荷施加在开关驱动件顶端中心，测量顶端移动的最大距离。 Placing the switch such that the direction of switch operation is vertical and then applying static load of 2times operating force to the center of the stem; the travel distance for the switch to come to a stop shall be measured.	2.5±0.2mm
4.3	操作部位强度 Operating part strength	在操作部位施加以下负载，时间 15 s。 Apply following load on the tip of of operating part 15 s. ☐ 操作方向 Operation direction ... 80N ☐ 引伸方向 Drawing direction ... 20N ☐ 操作方向直方向 Right direction against operating direction ... 10N	柄部无严重变形，可以正常工作. The lever shall have no serious deformation and function is normally.

项目 ITEM		试 验 条 件 TEST CONDITIONS	要求 REQUIREMENTS
4.4	端子强度 Terminal Strength	在端子脚前端任意一个方向加 5N 力度测试,时间为 10 秒 A static load of 5N shall be applied to the Terminal for 10 Sec. in any direction.	端子脚没有裂开、松动异常,满足于机械,电气性能 Electrical characteristics shall be satisfied without damage or excessive looseness of terminals
4.5	振动 Vibration	根据以下给定条件进行测试: Measurement shall be made following the test set forth below: （1） 振动频率范围：10～55～10Hz Vibration frequency range: 10 to 55 to 10Hz （2） 振幅（峰－峰）：1.5mm Amplitude: 1.5mm （3） 振动方向:包括手柄行程方向在内的三个相互垂直的方向 Direction of vibration:Three mutually perpendicular direction including the direction of stem travel （4） 测试时间：每次 2 小时 Duration: Each 2 hours.	Item 3 Item4.1 Item4.2 Item4.3
4.6	冲击 Shock	根据下列条件进行冲击试验 Test by following conditions (1)安装方法：正常安装 (1)installation method: normal (2)加速度：784m/s² (2)Acceleration: 784m/s² (3)作用时间：11ms (3)Acting time: 11ms (4)测试方向：6 个方向 冲击次数：每个方向 3 次，共计 18 次 (4)Test direction: 6 directions Times: 3 times/direction ,total 18 times 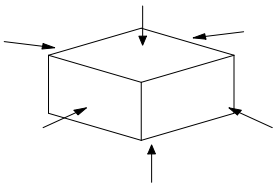	Item3 Item4.1 Item4.2 Item4.3

5、环境耐久性：
ENVIRONMENTAL SPECIFICATION

项目 ITEM		试 验 条 件 TEST CONDITIONS	要求 REQUIREMENTS
5.1	低温测试 Resistance to low temperature	样品应按照以下实验条件进行测试，实验后样品应放在常温及标准湿度的环境中 1 小时后做性能测试： Following the test set forth below the sample shall be left in normal temperature and humidity conditions for 1 h before measurements are made: （1） 温度：-40±2°C Temperature : -30±2°C （2） 时间：96h Time: 96h	Item3 Item4.1 Item4.2 Item4.3
5.2	高温测试 Heat resistance	样品应按照以下实验条件进行测试，实验后样品应放在常温及标准湿度的环境中 1 小时后做性能测试： Following the test set forth below the sample shall be left in normal temperature and humidity conditions for 1 h before measurements are made: （1） 温度：80±2°C temperature:80±2°C （2） 时间：96h time: 96h	Item3 Item4.1 Item4.2 Item4.3
5.3	温度变化测试 Change of temperature	根据下面的测试要求进行 5 次循环的温度周期性测试， 实验后样品应放在常温及标准湿度的环境中 1 小时后做性能测试。测试期间样品应保持干燥. After 5 cycles of following conditions, the sample shall be allowed to stand under normal temperature and humidity conditions for 1 h. and measurements shall be made. During the test water drops shall be removed. 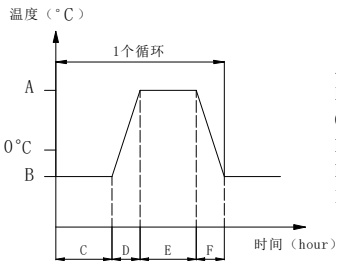 A：+80±2℃ B：-40±2℃ C：2 小时 D：1 小时 E：2 小时 F：1 小时	Item3 Item4.1 Item4.2 Item4.3
5.4	恒定湿热测试 Moisture resistance	样品应按照以下实验条件进行测试，实验后样品应放在常温及标准湿度的环境中 1 小时后做性能测试： Following the test set forth below the sample shall be left in normal temperature and humidity conditions for 1 h before measurements are made: （1） 温度：60±2°C temperature: 60±2°C （2） 相对湿度：90%～95% relative humidity:90% to 95% （3） 时间：96h time: 96h	接触电阻：≤200mΩ Contact resistance≤200mΩ 绝缘电阻：≥10MΩ Insulation Resistance≥10MΩ Item3.3 Item4.1 Item4.2 Item4.3

项目 ITEM		试 验 条 件 TEST CONDITIONS	要求 REQUIREMENTS
5.5	盐雾试验 Salt Mist	在以下设定条件下进行测量: The switch shall be checked after following test: （1）温度：35℃±2℃ temperature: 35℃±2℃ （2）盐溶液浓度：5±1%（质量百分比） salt solution : 5±1%(solids by mass) （3）时间：8±1h Time: 8±1h 实验后的盐沉积物后水冲掉 After test, salt deposit shall be removed by running water.	金属件上没有腐蚀斑点 No remarkable corrosion shall be recognized in metal part.
5.6	电气寿命 Operation life	根据下面的测试要求进行测试： Measurement shall be made following the test set forth below: （1） DC 30V，0.1A 带负载 DC 30V, 0.1A resistive load (2) 按动速率：10 次/分钟 Rate of operation: 10 times/min （3） 按力：按力的 1.5 倍 Operating Force：1.5 times as much as Operating Force （4） 无故障寿命：5,000 次 fault-free life:5,000cycles	接触电阻≤2Ω Contact resistance≤2Ω 绝缘电阻≥10MΩ Insulation Resistance≥10MΩ Item3.3 Item4.1 Item4.2 Item4.3
5.7	可焊性 Solderability	在以下设定条件下进行测量: Measurements shall be made following the test set forth below: (1) 焊接温度:245±5℃ Solder temperature : 245±5℃ (2) 浸入时间:5s±0.5s Immersion time: 5s±0.5s	除边缘外涂层应均匀覆盖90%以上 Except for the edge, the coating should cover a minimum 90%
5.8	耐焊性试验 Resistance to soldering heat test	在以下设定条件下进行测量: Measurements shall be made following the test set forth below: (1)焊接温度:260±5℃ Solder temperature : 260±5℃ (2)浸入时间:3s±1s Immersion time: 3s±1s	本体无变形,能满足于机械、电气性能。 Without deformation of case or excessive looseness of terminal selectrical characteristics shall be satisfied

6．焊接条件：

SOLDERING CONDITIONS:

项目 ITEM		推 荐 条 件 Recommended conditions	
6.1	手工焊接 Hand soldering	请按以下条件进行焊接： (1) 焊锡温度：≤350℃ (2) 连续焊接时间：≤3 s Please practice according to below conditions: (1) Soldering temperature: ≤350℃ (2) Continuous soldering time: ≤3 s	
6.2	自动浸焊 Conditions for Auto-dip	助焊剂附着量 Flux built-up	不附着于零部件贴装面的程度 Mounting surface should not be coated with flux
		预热温度 Preheating temperature	印刷电路板焊接面的周围温度 100℃ max. Ambient temperature of the soldered surface of PC board. 100℃ max.
		预热温度时间 Preheating time	60s max.
		焊接温度 Soldering temperature	260℃ max.
		焊接浸渍时间 Continuous dipping time	5s max.
		焊接次数 Number of soldering	最多两次 2 times max.

注意事项(Notes):

a、防止助焊剂从开关的顶端渗入

Prevent flux penetration from the top of the switch

b、开关浸焊后，注意不要用溶剂或类似品清洗开关。

After switches were soldered,please be careful not to clean switches with solvent or other similar products.

c、浸焊后，注意不要在顶部施加负荷。

Right after switches were soldered;please be careful not to load to on the knobs of switches.

d、注意不要施加超负荷的压力或晃动开关。

Please be cautions not to give excessive static load or shock to switches.

e、开关浸焊后，印刷基板注意不要叠放。

Please be careful not to pile up P.W.B.after switches were soldered

GANGYUAN

APPROVAL SPECIFICATIONS

Product name	P/N	Version	Document No.	Page
Lockless switch	PB21E08431-0506	A/00		10/11

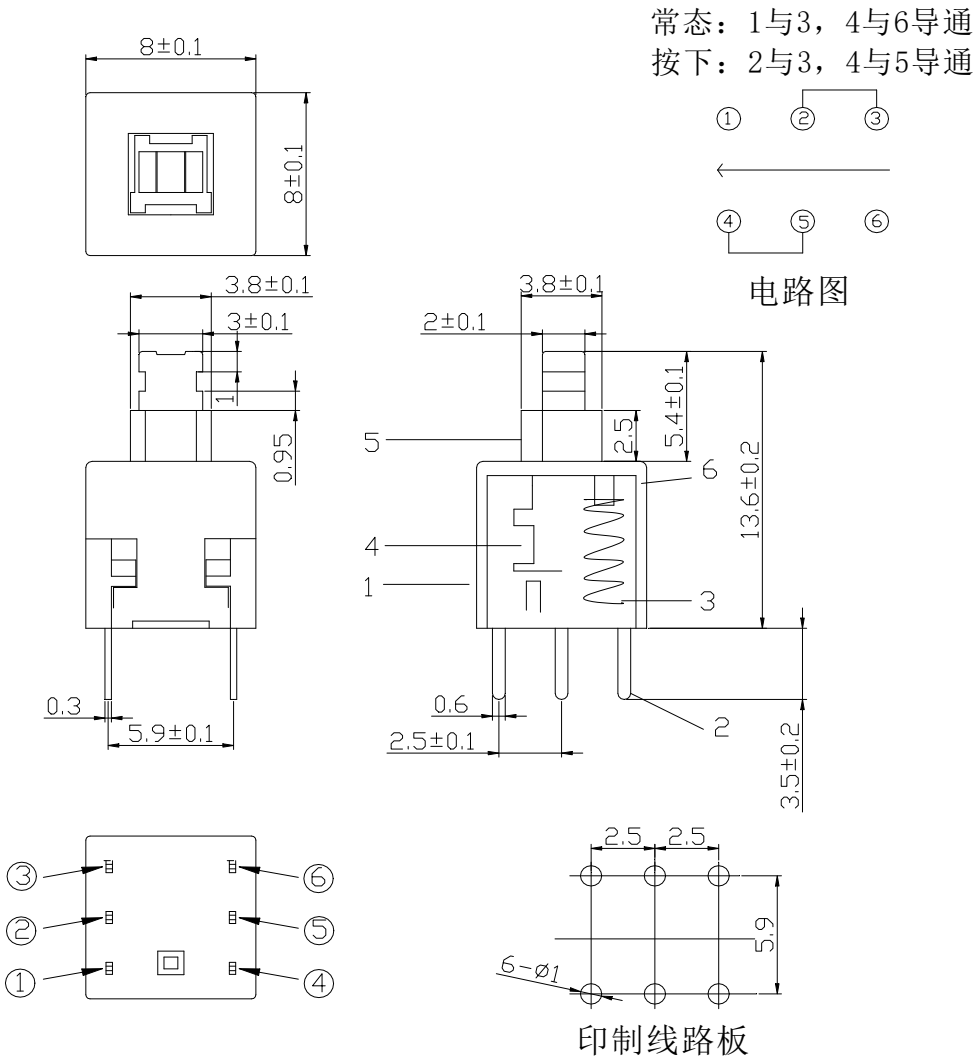

General tolerance：±0.2mm

NO.	NAME	MATERITAL	QTY.	PLATING
1	BASE	PA66	1	Black
2	TERMINAL	BRASS	6	Ag plating
3	SPRING	CARBON WIRE	1	
4	CONTACT	Silver copper	2	Ag plating
5	STEM	PA66	1	Blue
6	COVER	PA66	1	White

7、包装规格：

7.1:每个包装袋装 500 只，封口要紧密

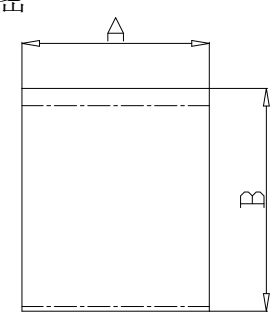

A=190mm、B=195mm

包装袋

7.2:每个内盒装 2 袋，共 1000 只

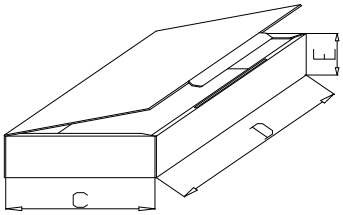

C=216mm、D=165mm、E=61mm

内 盒

7.3:每个外箱装 16 盒，共 16000 只

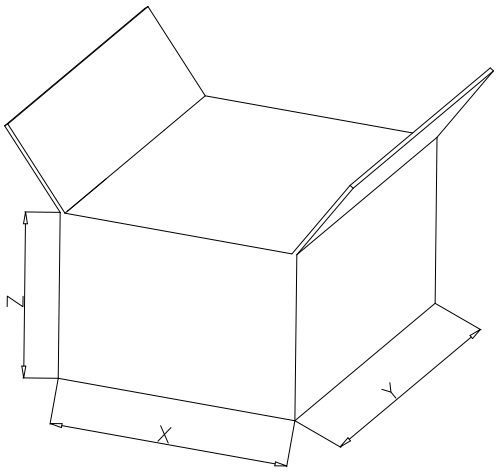

X=350mm、Y=455mm、Z=280mm

外箱