ISO9001: 2015		ISO14001: 2015

APPROVAL SPECIFICATIONS

Title. TACT SWITCH

Product Model. KAN6831-1223C010-83-Ag

Customer's Part NO.

Customer's Model:

Customer's Approval Requested.

Please return this copy as a certification of your approval.

Checked by: Date:

Approved by: Date:

Swiclick

Address:Rm. D1/25F,No 2070,Electronical Technology Building-C,Shennan Mid-road,Futian Dist.,Shenzhen,China.

Website:https://www.swiclick.com

变更履历表：

版本	变更记录	变更人	变 更 日 期
A/01	包装变更	王丽意	2025.08.06

1 、 概述

GENERAL

1.1 适用范围

APPLICATION

此规格书适用于机械式轻触开关的相关要求

This specification is applied to the requirements for tactile switch (mechanical contact)

1.2 工作温度范围

Operating Temperature Range

-30℃～80℃(在标准大气压、标准湿度条件下)

-30℃～80℃(Normal humidity, normal air pressure)

1.3 贮藏温度范围

Storage Temperature Range

-40℃～90℃(在标准大气压、标准湿度条件下)

-40℃～90℃(Normal humidity, normal air pressure)

1.4 测试条件

Test Conditions

在没有其它特定的条件下，应该在以下的条件下进行测试和测量：

Unless otherwise specified, tests and measurement shall be made in the following standard conditions:

常温 _____ 5℃～35℃

Normal temperature……5℃～35℃

标准湿度 _____ 相对湿度 25%～85%

Normal humidity……relative humidity 25%～85%

标准大气压 _____ 86Kpa～106Kpa

Normal air pressure……86Kpa～106Kpa

在制造过程中，测试和测量应该在以下的条件下进行：

If any doubt arise from the judgment, tests shall be conducted at the following conditions:

温度 _____ 20℃±2℃

Temperature……20℃±2℃

相对湿度 _____ 65%±5%

Relative humidity……65%±5%

环境气压 _____ 86Kpa～106Kpa

Air pressure……86Kpa～106Kpa

1.5 存储方法

Storage method

1. 使用前确保包装完整无破损，无浸湿.

   Ensure that the product without package breaking or wetting before use.

2. 存储条件 Storage conditions:

   储存温度 Storage temperature： -5～35 C；

   储存湿度 Storage humidity： 25% ~80%；

   未开封状态： 6 个月内使用完毕（从发货日开始计算）； 超过 6 个月后再使用的，使用前请先验证：端脚无氧化、无发黑、塑料件无吸湿起泡，确保焊接的适宜性；

   Unopened status: Use up the product as soon as possible before 6 months. (calculated from shipment date).Over 6 months, please make sure below before use it: terminal without oxidation or blackening, plastic parts without moisture absorption or bubble, ensure solderability.

   已开封状态： 1 个月内使用完毕；

   Opened status: use up within 1 month;

   储存注意事项：避开高湿高温和有腐蚀性气体的环境及阳光直射；

   Storage precautions: Please avoid the following environment: with high humidity, high temperature , corrosive gases and direct sunlight.

3. 请勿超重叠放.

   Do not stack too many switches.

2 、 详细说明

Detailed specification

2.1 外观： 应无影响、降低产品性能的缺陷；

Appearance: There should be no defects that affect the serviceability of product.

2.2 结构尺寸和安装尺寸： 应符合装配图要求；

Style and dimension: shall conform to the assemble drawings.

2.3 操作形式：有触觉反应的操作

Type of actuating: Tactile feedback.

2.4 开关结构：单回路单输出(具体的触点结构在装配图中已绘出)；

Contact arrangement: 1 pole, 1 throw

(Details of contact arrangement are given in the assembly drawings.)

2.5 开关工作额定值：DC 30V 30mA（最大值）

Ratings: DC 30V 30mA（Max）

3

ELECTRICAL SPECIFICATION

项 目 ITEM		试 验 条 件 TEST CONDITIONS	要求 REQUIREMENTS
3.1	接触电阻 Contact Resistance	在以 5V 10mA 的直流电源或不低于1KHz 的交流电源的电路中， 以一个等于 2 倍按力的静负荷施加于手柄中心 Applying a static load of 2 times operating force to the center of the stem, measurements shall be made by 5V DC 10mA or more than 1KHz AC small-current contact resistance meter.	≤100mΩ
3.2	绝缘电阻 Insulation Resistance	在端子之间施加 DC 100V /min 的条件下,测量端子之间底座、盖板的电阻值 Measurement shall be made following application of 100V DC potential, across terminals, and across terminals and cover, for one minute.	≥100MΩ
3.3	介质耐压 Dielectric voltage proof	在端子之间施加 250VAC(50Hz 或 60Hz)/min 250V AC (50Hz or 60Hz) shall be applied across terminals, for one minute.	无击穿、无飞弧 There should be no breakdown and flashover

项目 ITEM		试 验 条 件 TEST CONDITIONS	要求 REQUIREMENTS
3.4	触点抖动 Bounce	按照正常使用时的力度轻按手柄中心（每秒 3～4 次）， 在导通和断开过程中测试开关抖动 Lightly striking the center of the stem at a rate encountered in normal use (3 to 4 times per second), and bounce shall be tested at “ON” and “OFF” 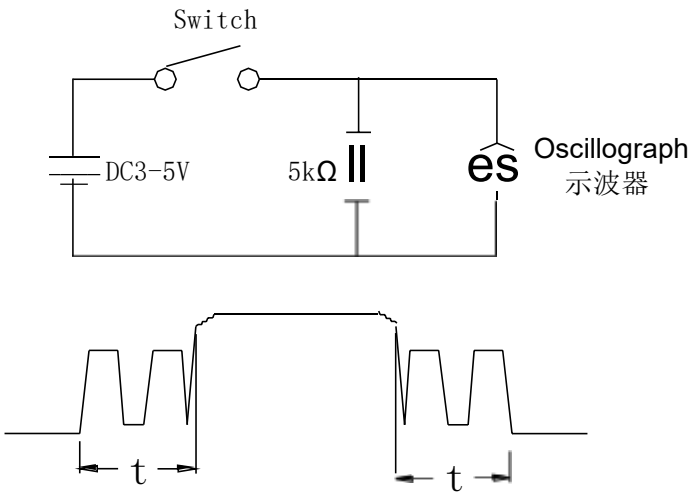 t 为触点抖动时间	ON-10ms max OFF-10ms max
4 **MECHANICAL SPECIFICATION**			
4.1	按力 Operating Force	开关垂直于操作方向放置，在开关驱动件顶端中心逐渐施力，测量开关导通所需的最大力度。 Placing the switch such that the direction of switch operation is vertical and then gradually increasing the load applied to the center of the stem, the maximum load required for the switch to come to a stop shall be measured.	260±70 gf
4.2	最大行程 Full Travel	开关垂直于操作方向放置，以一个等于 2 倍按力的静负荷施加在开关驱动件顶端中心，测量顶端移动的距离。 Placing the switch such that the direction of switch operation is vertical and then applying static load of 2times operating force to the center of the stem; the travel distance for the switch to come to a stop shall be measured.	0.25±0.1mm

项目 ITEM		试 验 条 件 TEST CONDITIONS	要求 REQUIREMENTS
4.3	回弹力 Return Force	开关垂直于操作方向放置，在开关驱动件顶端中心下降至全行程后，测量顶端向自由位置转换的力度。 The sample switch is installed such that the direction of switch operation is vertical and upon depressing the stem in its center to the whole travel distance, the force of the stem to return to its free position shall be measured.	20gf Min
4.4	停止强度 Stop Strength	开关垂直于操作方向放置，从操作方向向驱动件施加 30N 的静负荷持续 1min 。 Placing the switch such that the direction of switch operation is vertical, and then a static load of 30N shall be applied in the direction of stem operation for a period of 1 min.	无机械和电气损坏 There shall be no sign of damage mechanically and electrically.
4.5	手柄拔出强度 Stem Strength	开关垂直于操作方向放置，反方向实施最大操作力，并测量手柄的行程范围。 Placing the switch such that the direction of switch operation is vertical, and then the maximum force to withstand a pull applied opposite to the direction of stem operation shall be measured.	20N min.
4.6	振动 Vibration	根据以下给定条件进行测试： Measurement shall be made following the test set forth below: (1) 振动频率范围：10～55～10Hz Vibration frequency range: 10 to 55 to 10Hz (2) 振幅（峰 - 峰）：1.5mm Amplitude: 1.5mm (3) 振动方向：包括手柄行程方向在内的三个相互垂直的方向 Direction of vibration:Three mutually perpendicular direction including the direction of stem travel (4) 测试时间：每次 2 小时 Duration: Each 2 hours.	Item 3 Item4.1 Item4.2 Item4.3
4.7	冲击 Shock	根据下列条件进行冲击试验 Test by following conditions (1)安装方法：正常安装 (1)installation method: normal (2)加速度：784m/s² (2)Acceleration: 784m/s² (3)作用时间：11ms (3)Acting time: 11ms (4)测试方向：6 个方向 冲击次数：每个方向 3 次，共计 18 次 (4)Test direction: 6 directions Times: 3 times/direction ,total 18 times 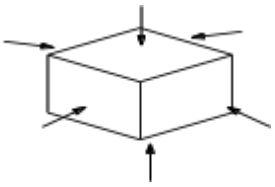	Item3 Item4.1 Item4.2 Item4.3

5
ENVIRONMENTAL SPECIFICATION

项目 ITEM		试 验 条 件 TEST CONDITIONS	要求 REQUIREMENTS
5.1	低温测试 Resistance to low temperature	样品应按照以下实验条件进行测试，实验后样品应放在常温及标准湿度的环境中 1 小时后做性能测试： Following the test set forth below the sample shall be left in normal temperature and humidity conditions for 1 h before measurements are made: （1） 温度：-40±2℃ Temperature ：-40±2℃ （2） 时间：96h Time: 96h	Item3 Item4.1 Item4.2 Item4.3
5.2	高温测试 Heat resistance	样品应按照以下实验条件进行测试，实验后样品应放在常温及标准湿度的环境中 1 小时后做性能测试： Following the test set forth below the sample shall be left in normal temperature and humidity conditions for 1 h before measurements are made: （1） 温度：90±2℃ temperature:90±2℃ （2） 时间：96h time: 96h	Item3 Item4.1 Item4.2 Item4.3
5.3	温度周期性测试 Change of temperature	根据下面的测试要求进行 5 次循环的温度周期性测试， 实验后样品应放在常温及标准湿度的环境中 1 小时后做性能测试 。测试期间样品应保持干燥. After 5 cycles of following conditions, the sample shall be allowed to stand under normal temperature and humidity conditions for 1 h. and measurements shall be made. During the test water drops shall be removed. 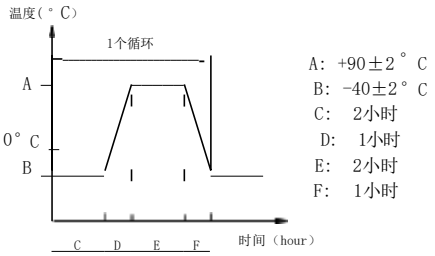 	Item3 Item4.1 Item4.2 Item4.3
5.4	湿温测试 Moisture resistance	样品应按照以下实验条件进行测试，实验后样品应放在常温及标准湿度的环境中 1 小时后做性能测试： Following the test set forth below the sample shall be left in normal temperature and humidity conditions for 1 h before measurements are made: （1） 温度：60±2℃ temperature: 60±2℃ （2） 相对湿度：90%～95% relative humidity:90% to 95% （3） 时间：96h time: 96h	接触电阻：≤200mΩ Contact resistance≤200mΩ 绝缘电阻：≥10MΩ Insulation Resistance≥10MΩ Item3.3 Item3.4 Item4.1 Item4.2 Item4.3

项目 ITEM		试 验 条 件 TEST CONDITIONS	要求 REQUIREMENTS
5.5	盐雾试验 Salt Mist	在以下设定条件下进行测量: The switch shall be checked after following test: （1）温度：35℃±2℃ temperature: 35℃±2℃ （2）盐溶液浓度：5±1%（质量百分比） salt solution：5±1%(solids by mass) （3）时间：48±1h Time: 48±1h 实验后的盐沉积物后水冲掉 After test, salt deposit shall be removed by running water.	金属件上没有腐蚀斑点 No remarkable corrosion shall be recognized in metal part.
5.6	动作寿命 Operation life	根据下面的测试要求进行测试： Measurement shall be made following the test set forth below: （1） DC 5V，5mA 带负载 DC 5V, 5 mA resistive load （2） 按动速率：20 次/分 Rate of operation: 20 times/minute （3） 按力：按力的 1.5 倍 Operating Force： 1.5 times as much as Operating Force （4） 无故障寿命：100,000 次 fault-free life:100,000 cycles	接触电阻≤5Ω Contact resistance≤5Ω 绝缘电阻≥10MΩ Insulation Resistance≥10MΩ 触点抖动 ON-20ms max Bounce OFF-20ms max 按力：初值的±30% Operating Force: initial value±30% Item3.3 Item4.2

项目 ITEM		试 验 条 件 TEST CONDITIONS	要求 REQUIREMENTS
5.7	可焊性 Solderability	在以下设定条件下进行测量: Measurements shall be made following the test set forth below: (1) 焊接温度:235±5℃ Solder temperature : 235±5℃ (2) 浸入时间:3s±0.5s Immersion time: 3s±0.5s	除边缘外涂层应均匀覆盖90%以上 Except for the edge, the coating should cover a minimum 90%
6 **SOLDERING CONDITIONS:**			
6.1	手工焊接 Hand soldering	请按以下条件进行焊接: (1) 焊锡温度:≤350℃ (2) 连续焊接时间:≤3 s Please practice according to below conditions: (1) Soldering temperature: ≤350℃ (2) Continuous soldering time: ≤3 s	

项目 ITEM		推 荐 条 件 Recommended conditions
6.2	回流焊时 Conditions for reflow	对于 SMT 产品，请按以下条件进行焊接： For SMT products, Pls soldering by follow conditions: 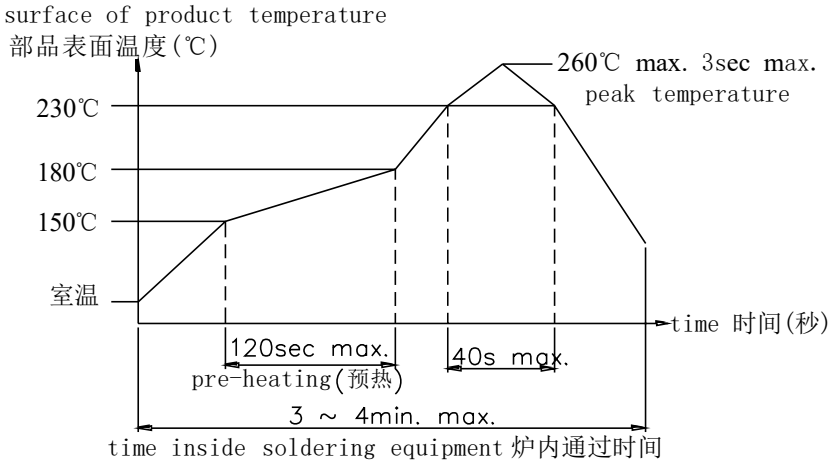 注意：以上提及的条件是零部件上 PWB 表面的温度，由于 PWB 的材料、尺寸、厚度等不同，PWB 从开关表面获得的温度也会有很大产不同，因此，千万小心不要让开关表面温度超过 260℃ Attention:the condition above is the temperature of the PWB surface on the parts,and PWB will get different temperature because of the differences of materials,sizes,thickness and so on.Should control it below 260℃

注意事项(Notes)：

a 、印刷基板的焊盘尺寸参见产品图。

The pad size of the printed substrate is shown in the product diagram.

b 、在使用烙铁的情况下，焊锡温度应在 350℃以下、3 秒以内。

In the case of using soldering iron, soldering conditions shall be 350℃ max and 3 sec.max.

c 、防止助焊剂从开关的顶端渗入

Prevent flux penetration from the top of the switch

d 、开关浸焊后，注意不要用溶剂或类似品清洗开关 。

After switches were soldered,please be careful not to clean switches with solvent or other similar products.

e 、浸焊后，注意不要在顶部施加负荷。

Right after switches were soldered;please be careful not to load to on the knobs of switches.

f 、注意不要施加超负荷的压力或晃动开关。

Please be cautions not to give excessive static load or shock to switches.

g 、开关浸焊后，印刷基板注意不要叠放。

Please be careful not to pileup P.W.B.after switches were soldered

APPROVAL SPECIFICATIONS

Product name	P/N	Version	Document No.	Page
Tact switch	KAN6831-1223C010-83-Ag	A/01		11/12

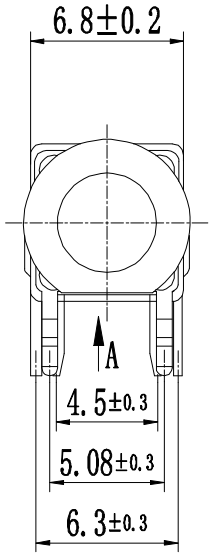

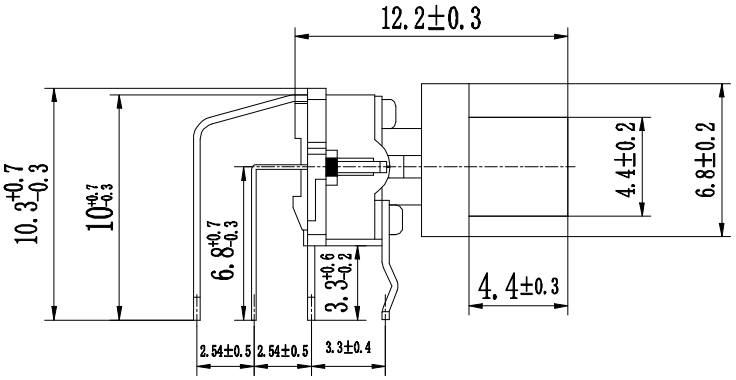

元件面孔位图

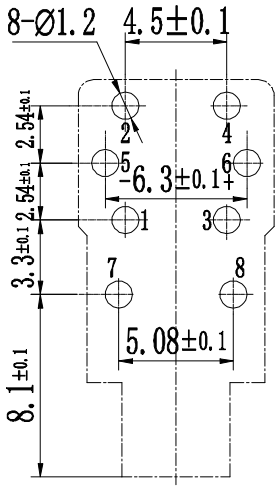

电原理图

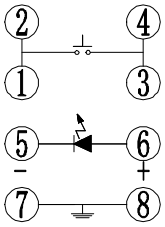

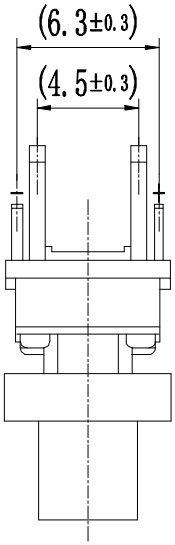

General tolerance：±0.3mm

NO.	NAME	MATERIAL	QTY.	FINISHING
1	TERMINAL	H62	1	Ag plating
2	CASE	PA66	1	BLACK
3	LED		1	BLUE
4	CONTACT	SUS	1	Ag plating
5	EARTH TAG	H62	1	Ag plating
6	COVER	PC	1	WHITE
7	STEM	PA66	1	WHITE
8	CAP	PC	1	SILVER

7、包装规格：

7.1:每盒盘装160只，5盘一捆，盖口要紧密

315*225*150mm

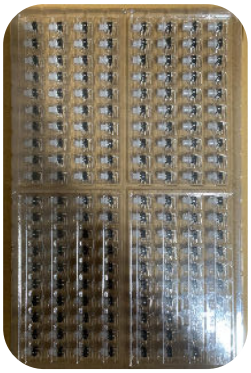

7.2:每个外箱装6捆30盘，共4800只

320*250*300mm

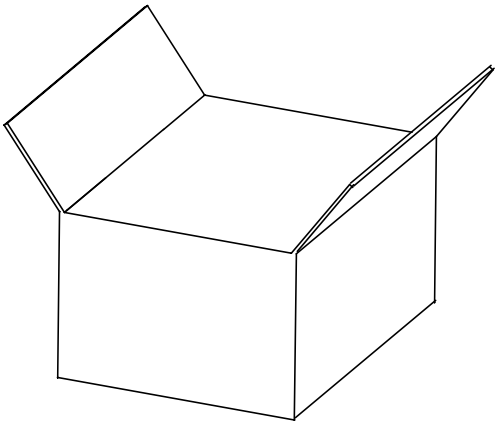

外箱