ISO9001: 2015

ISO14001: 2015

APPROVAL SPECIFICATIONS

Title. TACT SWITCH

Product Model. KAN0656-0801C1-C15

Customer's Part NO.

Customer's Model:

Customer's Approval Requested.

Please return this copy as a certification of your approval.

Checked by: Date:

Approved by: Date:

Swiclick

Address:Rm. D1/25F,No 2070,Electronical Technology Building-C,Shennan Mid-road,Futian Dist.,Shenzhen,China.

Website:https://www.swiclick.com

Swiclick

APPROVAL SPECIFICATIONS

Product name	P/N	Version	Document No.	Page
Tact switch	KAN0656-0801C1-C15	A/01		2/12

A/01			2018.11.03

Swiclick

APPROVAL SPECIFICATIONS

Product name	P/N	Version	Document No.	Page
Tact switch	KAN0656-0801C1-C15	A/01		3/12

1

GENERAL

1.1

APPLICATION

This specification is applied to the requirements for tactile switch (mechanical contact)

1.2

Operating Temperature Range

-30 80 ( )

-30 80 (Normal humidity, normal air pressure)

1.3

Storage Temperature Range

-40 90 ( )

-40 90 (Normal humidity, normal air pressure)

1.4

Test Conditions

Unless otherwise specified, tests and measurement shall be made in the following standard conditions:

……5 35

Normal temperature……5 35

…… 25% 85%

Normal humidity……relative humidity 25% 85%

……86Kpa 106Kpa

Normal air pressure……86Kpa 106Kpa

If any doubt arise from the judgment, tests shall be conducted at the following conditions:

……20 ±2

Temperature……20 ±2

……65%±5%

Relative humidity…….....…65%±5%

……86Kpa 106Kpa

Air pressure……86Kpa 106Kpa

1.5

Storage method

1. .

Ensure that the product without package breaking or wetting before use.

2. Storage conditions:

Storage temperature -5 ~ 35 C

Storage humidity 25% ~80%

6 6

Unopened status: Use up the product as soon as possible before 6 months. (calculated from shipment date).Over 6 months, please make sure below before use it: terminal without oxidation or blackening, plastic parts without moisture absorption or bubble, ensure solderability.

1

Opened status: use up within 1 month;

Storage precautions: Please avoid the following environment: with high humidity, high temperature , corrosive gases and direct sunlight.

3. .

Do not stack too many switches.

Swiclick

APPROVAL SPECIFICATIONS

Product name	P/N	Version	Document No.	Page
Tact switch	KAN0656-0801C1-C15	A/01		4/12

2

Detailed specification

2.1

Appearance: There should be no defects that affect the serviceability of product.

2.2

Style and dimension: shall conform to the assemble drawings.

2.3

Type of actuating: Tactile feedback.

2.4 ( )

Contact arrangement: 1 pole, 1 throw

(Details of contact arrangement are given in the assembly drawings.)

2.5 DC 12V 50mA DC 1V 10μA

Ratings: DC 12V 50mA Max DC 1V 10μA Min

3

ELECTRICAL SPECIFICATION

ITEM		TEST CONDITIONS	REQUIREMENTS
3.1	Contact Resistance	5V 10mA 1KHz 2 Applying a static load of 2 times operating force to the center of the stem, measurements shall be made by 5V DC 10mA or more than 1KHz AC small-current contact resistance meter.	≤100mΩ
3.2	Insulation Resistance	DC 100V /min , Measurement shall be made following application of 100V DC potential, across terminals, and across terminals and cover, for one minute.	≥100MΩ
3.3	Dielectric voltage proof	250V AC(50Hz 60Hz)/min 250V AC (50Hz or 60Hz) shall be applied across terminals, for one minute.	There should be no breakdown and flashover

Swiclick

APPROVAL SPECIFICATIONS

Product name	P/N	Version	Document No.	Page
Tact switch	KAN0656-0801C1-C15	A/01		5/12

	ITEM	TEST CONDITIONS	REQUIREMENTS
3.4	Bounce	3 4 Lightly striking the center of the stem at a rate encountered in normal use (3 to 4 times per second), and bounce shall be tested at “ON” and “OFF” 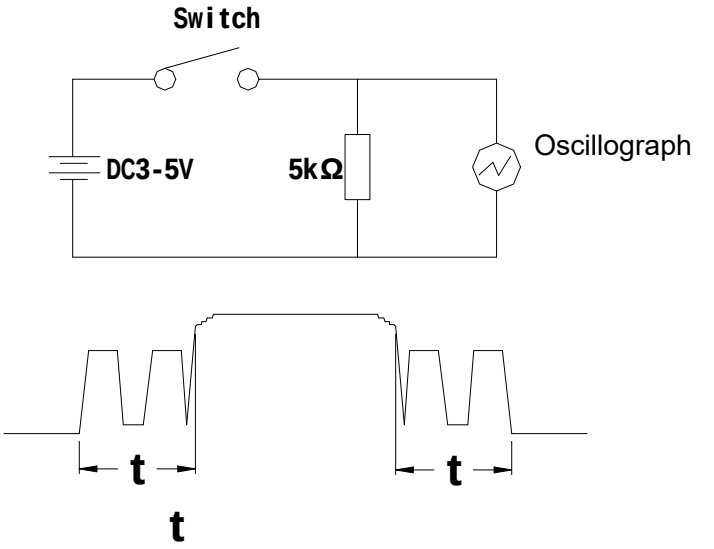	ON-3ms max OFF-8ms max
4 **MECHANICAL SPECIFICATION**			
4.1	Operating Force	Placing the switch such that the direction of switch operation is vertical and then gradually increasing the load applied to the center of the stem, the maximum load required for the switch to come to a stop shall be measured.	260±50gf
4.2	Full Travel	2 Placing the switch such that the direction of switch operation is vertical and then applying static load of 2times operating force to the center of the stem; the travel distance for the switch to come to a stop shall be measured.	0.30±0.1mm

Swiclick

APPROVAL SPECIFICATIONS

Product name	P/N	Version	Document No.	Page
Tact switch	KAN0656-0801C1-C15	A/01		6/12

ITEM		TEST CONDITIONS	REQUIREMENTS
4.3	Return Force	The sample switch is installed such that the direction of switch operation is vertical and upon depressing the stem in its center to the whole travel distance, the force of the stem to return to its free position shall be measured.	20gf Min
4.4	Stop Strength	30N 1min Placing the switch such that the direction of switch operation is vertical, and then a static load of 30N shall be applied in the direction of stem operation for a period of 1 min.	There shall be no sign of damage mechanically and electrically.
4.5	Stem Strength	Placing the switch such that the direction of switch operation is vertical, and then the maximum force to withstand a pull applied opposite to the direction of stem operation shall be measured.	20N min.
4.6	Vibration	Measurement shall be made following the test set forth below: 1 10 55 10Hz Vibration frequency range: 10 to 55 to 10Hz 2 1.5mm Amplitude: 1.5mm 3 Direction of vibration:Three mutually perpendicular direction including the direction of stem travel 4 2 Duration: Each 2 hours.	Item 3 Item4.1 Item4.2 Item4.3
4.7	Shock	Test by following conditions (1) (1)installation method: normal (2) 784m/s² (2)Acceleration: 784m/s² (3) 11ms (3)Acting time: 11ms (4) 6 3 18 (4)Test direction: 6 directions Times: 3 times/direction ,total 18 times 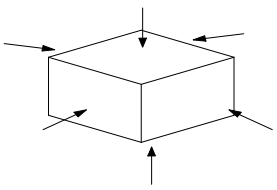	Item3 Item4.1 Item4.2 Item4.3

Swiclick

APPROVAL SPECIFICATIONS

Product name	P/N	Version	Document No.	Page
Tact switch	KAN0656-0801C1-C15	A/01		7/12

5
ENVIRONMENTAL SPECIFICATION

ITEM		TEST CONDITIONS	REQUIREMENTS
5.1	Resistance to low temperature	1 Following the test set forth below the sample shall be left in normal temperature and humidity conditions for 1 h before measurements are made: 1 -40±2 Temperature : -40±2 2 96h Time: 96h	Item3 Item4.1 Item4.2 Item4.3
5.2	Heat resistance	1 Following the test set forth below the sample shall be left in normal temperature and humidity conditions for 1 h before measurements are made: 1 90±2 temperature:90±2 2 96h time: 96h	Item3 Item4.1 Item4.2 Item4.3
5.3	Change of temperature	5 1 . After 5 cycles of following conditions, the sample shall be allowed to stand under normal temperature and humidity conditions for 1 h. and measurements shall be made. During the test water drops shall be removed. 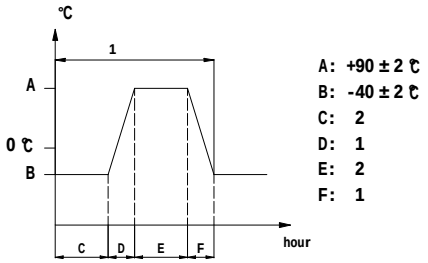	Item3 Item4.1 Item4.2 Item4.3
5.4	Moisture resistance	1 Following the test set forth below the sample shall be left in normal temperature and humidity conditions for 1 h before measurements are made: 1 60±2 temperature: 60±2 2 90% 95% relative humidity:90% to 95% 3 96h time: 96h	≤200mΩ Contact resistance≤200mΩ ≥10MΩ Insulation Resistance≥10MΩ Item3.3 Item3.4 Item4.1 Item4.2 Item4.3

Swiclick

APPROVAL SPECIFICATIONS

Product name	P/N	Version	Document No.	Page
Tact switch	KAN0656-0801C1-C15	A/01		8/12

ITEM		TEST CONDITIONS	REQUIREMENTS
5.5	Sulfuration resistance	1 Following the test set forth below the sample shall be left in normal temperature and humidity conditions for 1 h before measurements are made: 1 H2S 3ppm±1ppm H_2S gas concentration: 3ppm±1ppm 2 96h Time: 96h 3 40±2 90 95%RH temperature: 40±2 90 95%RH	≤200mΩ Contact resistance≤200mΩ Item3.3 Item3.4 Item4.1 Item4.2 Item4.3
5.6	Salt Mist	: The switch shall be checked after following test: 1 35 ±2 temperature: 35 ±2 2 5±1% salt solution : 5±1%(solids by mass) 3 48±1h Time: 48±1h After test, salt deposit shall be removed by running water.	No remarkable corrosion shall be recognized in metal part.
5.7	Operation life	Measurement shall be made following the test set forth below: 1 DC 12V 50mA DC 12V, 50 mA resistive load (2) 2 / Rate of operation: 2 times/s 3 1.5 Operating Force 1.5 times as much as Operating Force 4 100,000 fault-free life:100,000 cycles	≤1Ω Contact resistance≤1Ω ≥10MΩ Insulation Resistance≥10MΩ ON-20ms max Bounce OFF-20ms max ±30% Operating Force: initial value±30% Item3.3 Item4.2

Swiclick

APPROVAL SPECIFICATIONS

Product name	P/N	Version	Document No.	Page
Tact switch	KAN0656-0801C1-C15	A/01		9/12

ITEM		TEST CONDITIONS	REQUIREMENTS
5.8	Solderability	: Measurements shall be made following the test set forth below: (1) :235±5 Solder temperature : 235±5 (2) :3s±0.5s Immersion time: 3s±0.5s	90% Except for the edge, the coating should cover a minimum 90%
5.9	Waterproof grade	1 IP6X: 1 IP6X:Products to be placed in the negative pressure pumping, dust box 2 IPX7 , 1 30min 2 IPX7 Short time immersion in water, the provisions of the pressure of the shell by the prescribed time after water content not reach harmful levels, placed on adive in the water tank, the general depth of 1 meters, the testing time is 30min;	≤200mΩ Contact resistance≤200mΩ ≥10MΩ Insulation Resistance≥10MΩ Item3.3 Item3.4 Item4.1 Item4.2 Item4.3
6 **SOLDERING CONDITIONS:**			
6.1	Hand soldering	(1) ≤350 (2) ≤3 s Please practice according to below conditions: (1) Soldering temperature: ≤350 (2) Continuous soldering time: ≤3 s	

Swiclick

APPROVAL SPECIFICATIONS

Product name	P/N	Version	Document No.	Page
Tact switch	KAN0656-0801C1-C15	A/01		10/12

ITEM		Recommended conditions	
6.2	Conditions for Auto-dip	Items	Condition
		Flux built-up	Mounting surface should not be coated with flux
		Preheating temperature	100 max. Ambient temperature of the soldered surface of PC board. 100 max.
		Preheating time	60s max.
		Soldering temperature	260 max.
		Continuous dipping time	5s max.
		Number of soldering	2 times max.

(Notes)

a

The pad size of the printed substrate is shown in the product diagram.

b 350 3

In the case of using soldering iron, soldering conditions shall be 350 max and 3 sec.max.

c

Prevent flux penetration from the top of the switch

d

After switches were soldered,please be careful not to clean switches with solvent or other similar products.

e

Right after switches were soldered;please be careful not to load to on the knobs of switches.

f

Please be cautions not to give excessive static load or shock to switches.

g

Please be careful not to pile up P.W.B.after switches were soldered

APPROVAL SPECIFICATIONS

Product name	P/N	Version	Document No.	Page
Tact switch	KAN0656-0801C1-C15	A/01		11/12

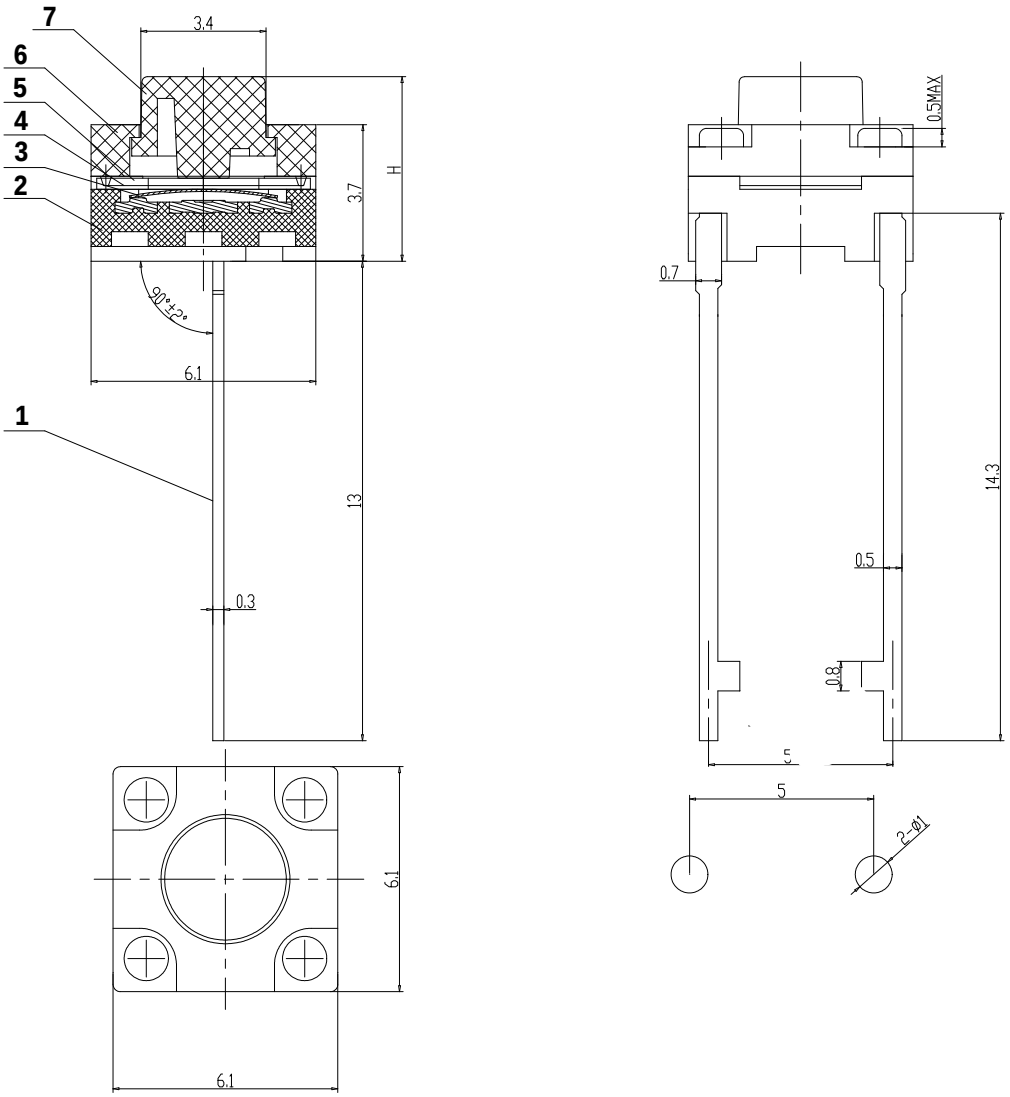

General tolerance ±0.2mm H=8.0

NO.	NAME	MATERIAL	QTY.	FINISHING
1	TERMINAL	Brass	1	Silver plating
2	CASE	PA66	1	Black
3	CONTACT	SUS	1	Ag plating
4	Waterproof membrane	PI	1	Yellow
5	Rubber pad	SILICONE RUBBER	1	Black
6	COVER	PA66	1	Black
7	STEM	PA66	1	Black

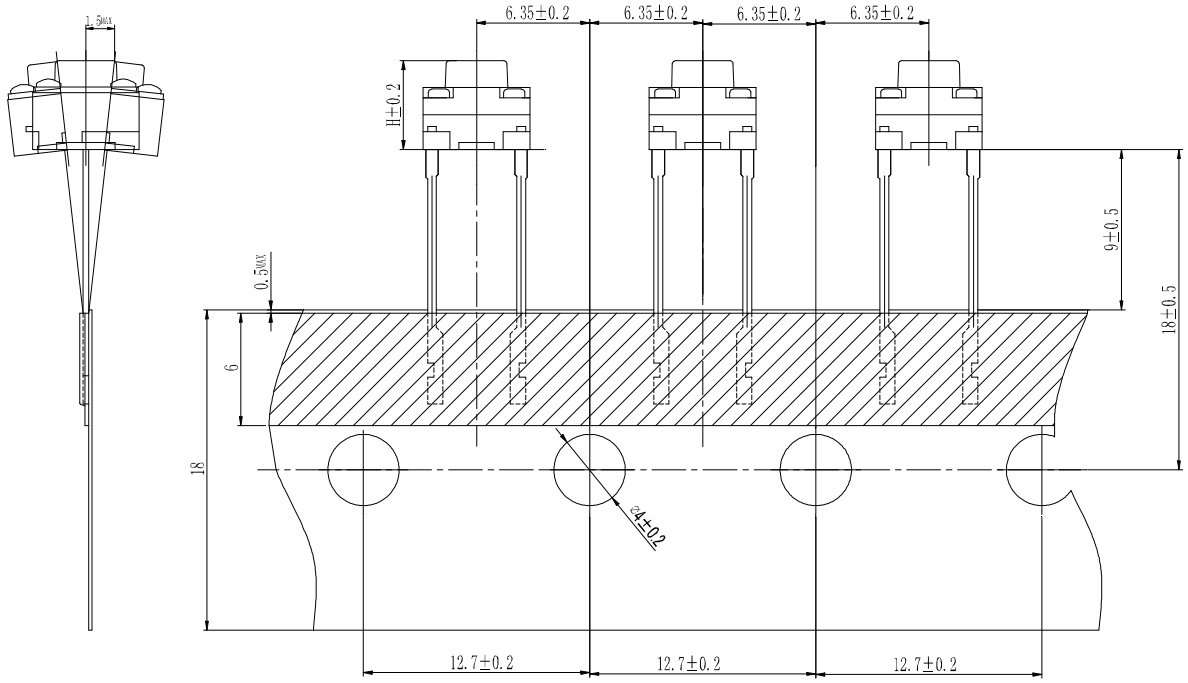

技术要求：

1.2000pcs

						A/00	Swiclick
		X.	±0.3			1:1	
		X.X	±0.2		mm	1/1	
		X.XX	±0.1			A4	KAN0656
			±3°				